novosan

Monterings anvisningar för Urimat Ecoplus, Ecovideo

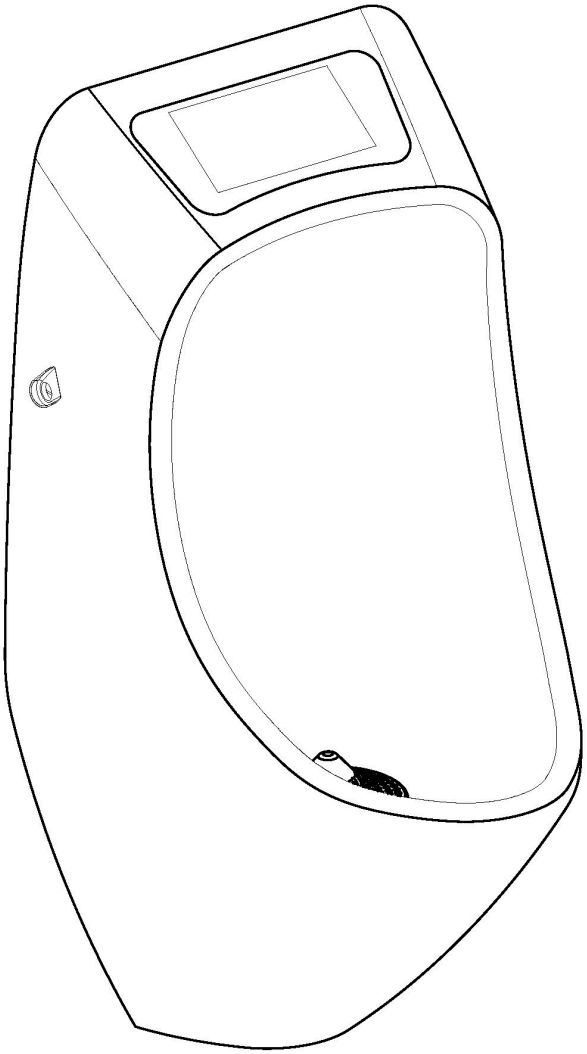

1 x 21.001 ECO

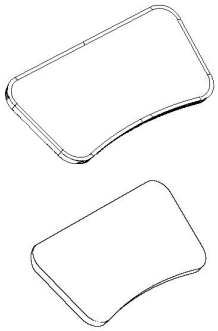

1 x 44.100 / Display Cover
1 x 42.002 / Spacer

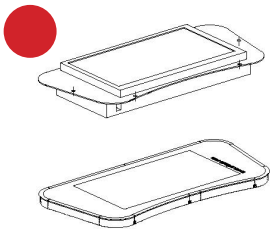

1 x 30.978 Netzteil 12V
1 x 30.981KU / Display USB
1 x 30.981K / Display HDMI
1 x 44.181 / Display Cover

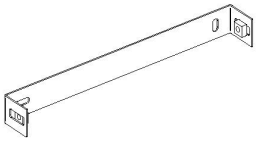

1 x 58.405/ Mounting Bracket
2 x 57.350 / Nut

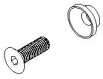

2 x 57.300 Counter Sunk Screw
2 x 58.701 Distance Washer / Bush

2 x Screw - Washer - Dowel

1 x 56.111 / Sheeve

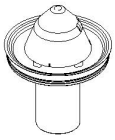

1 x 52101 / MB Trap

1 x 66.010 / Seal

15.06.2022/mr/Rev.04

Novosan kundservice:
kundservice@novosan.se **+46 8 590 320 90**

novosan

Monterings anvisningar för Urimat Ecoplus, Ecovideo

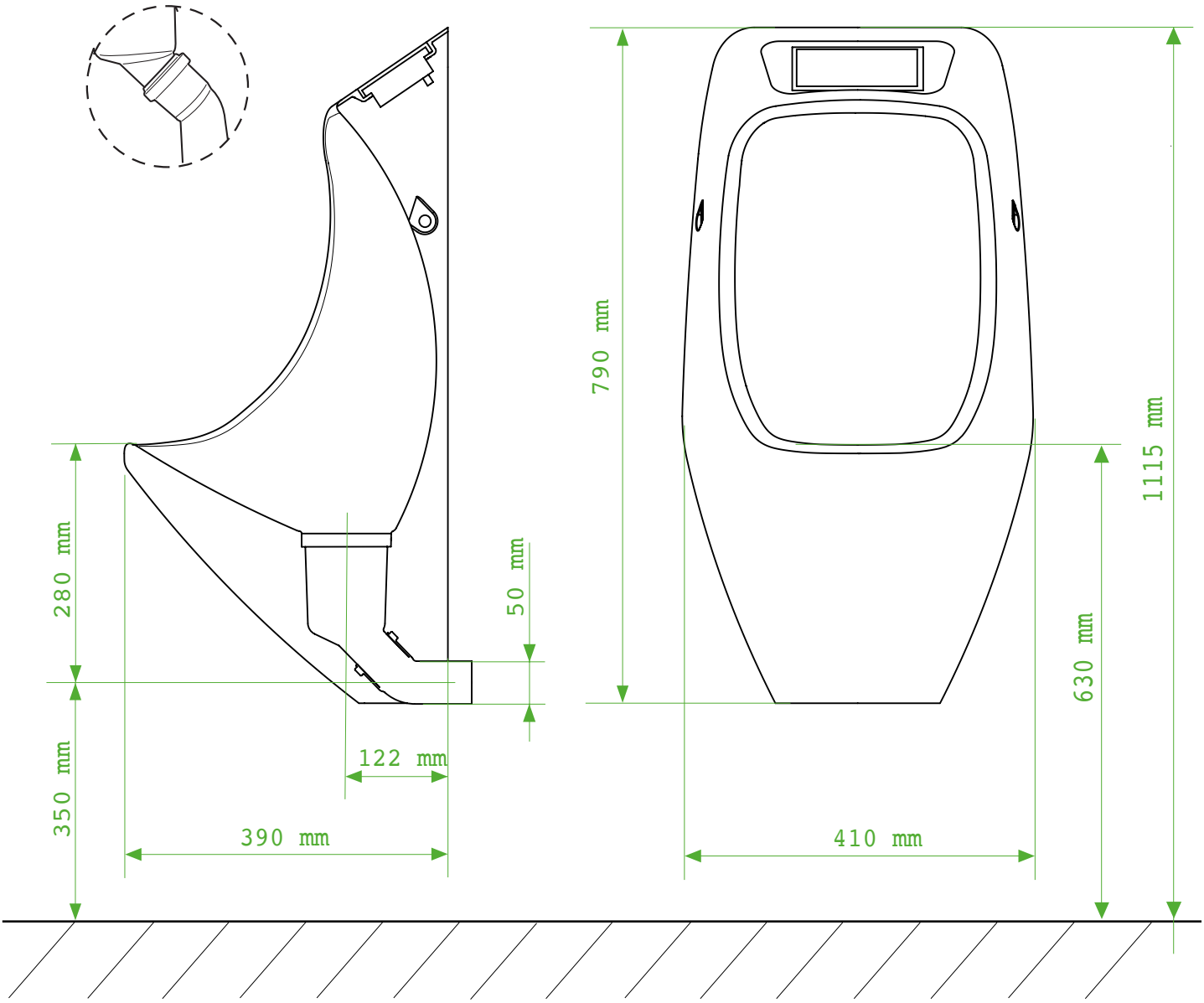

Novosan kundservice:
kundservice@novosan.se **+46 8 590 320 90**

novosan

1

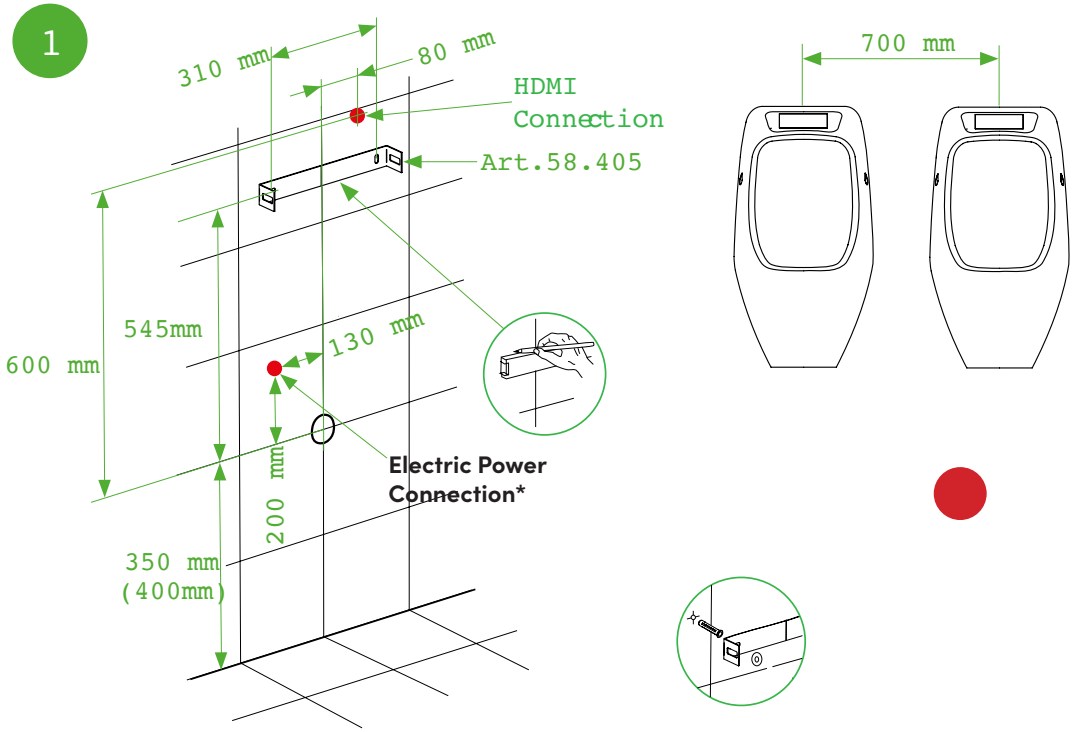

* 110V – 230V only used for URIMAT ecovideo

2

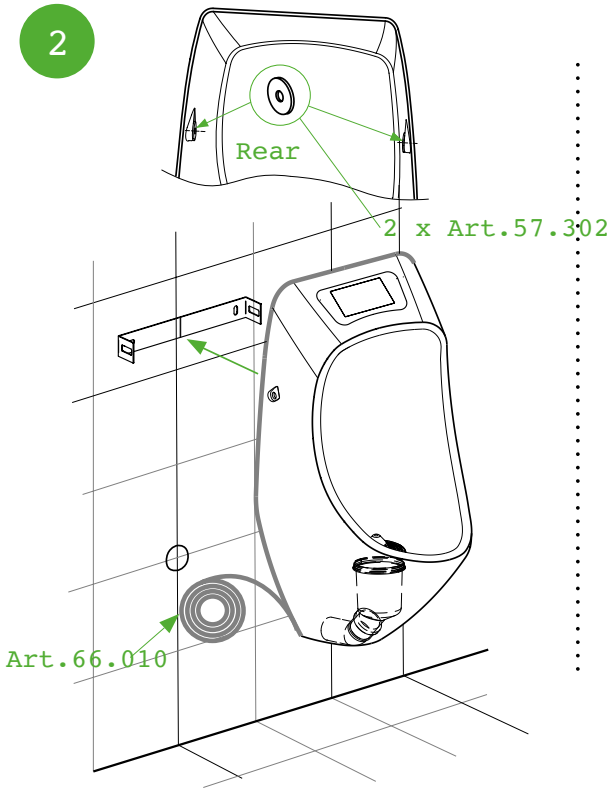

3

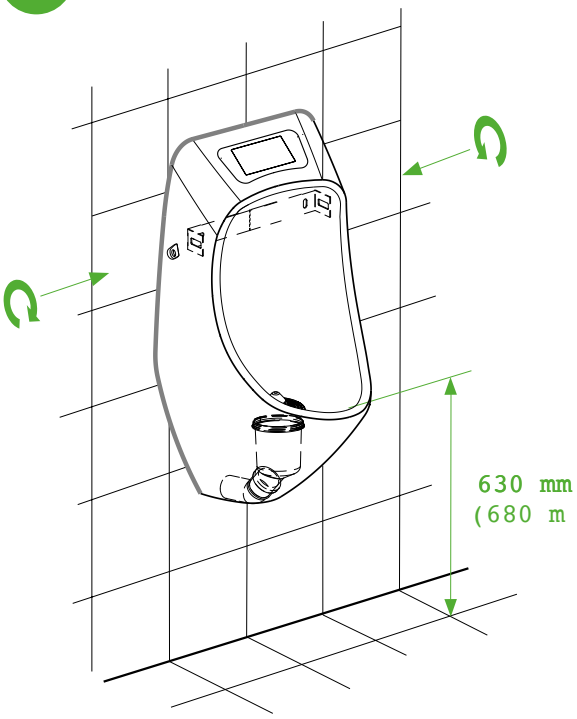

Novosan kundservice:
kundservice@novosan.se **+46 8 590 320 90**